WIRELESS DOOR LOCK CONTROL (RHD)

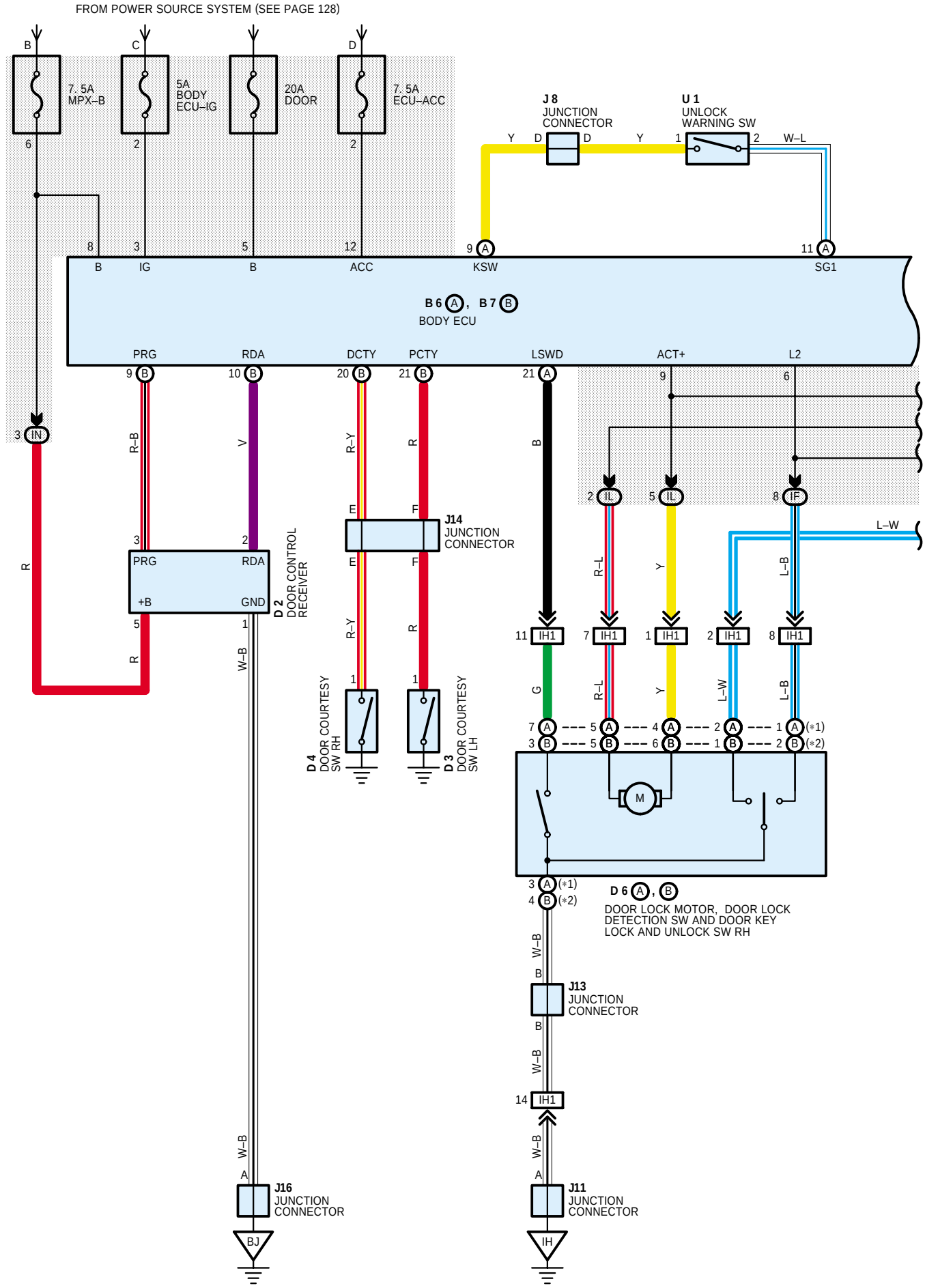

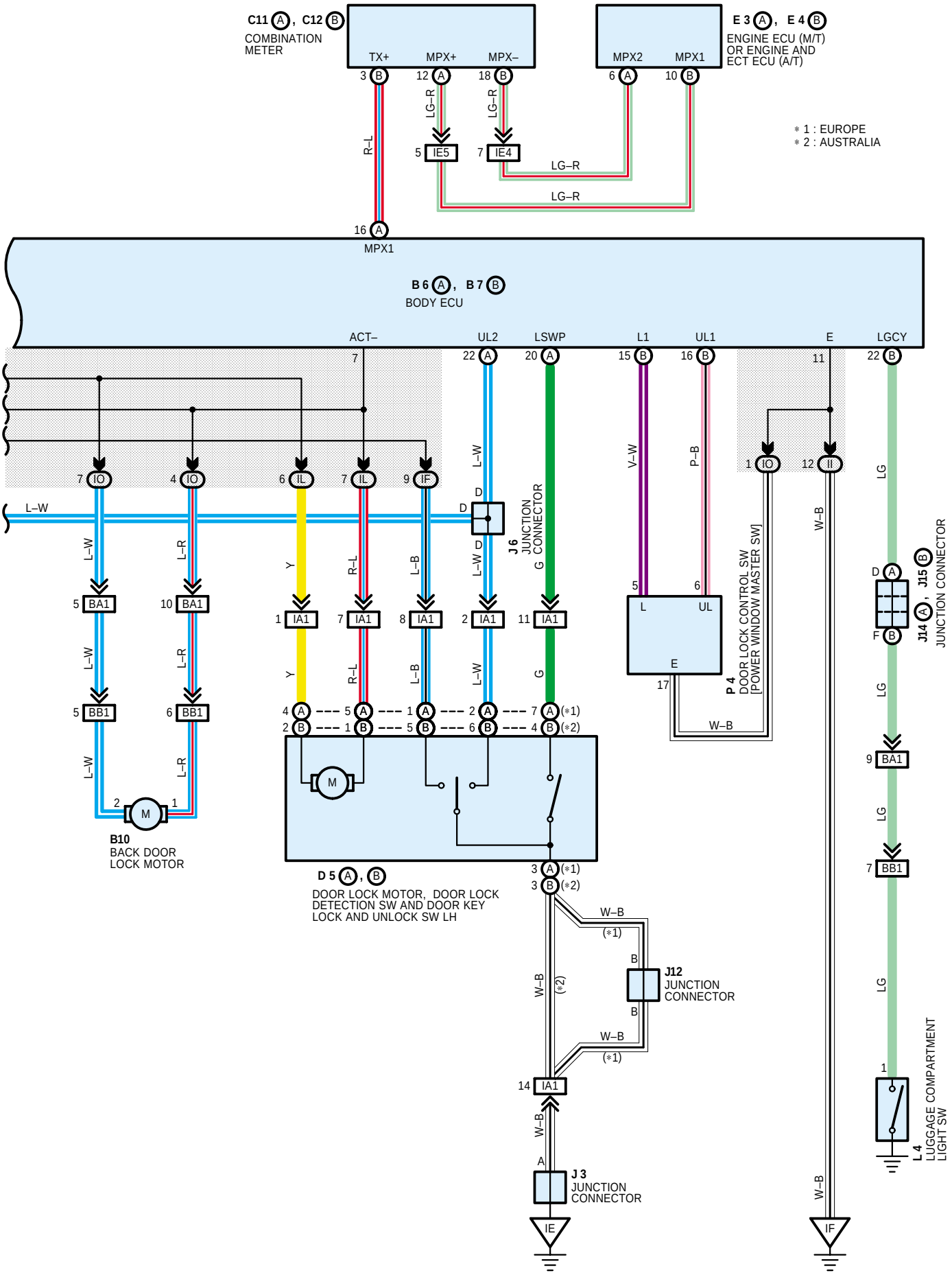
C11 A, C12 B
COMBINATION METER
TX+
MPX+
MPX–
E 3 A, E 4 B
ENGINE ECU (M/T) OR ENGINE AND ECT ECU (A/T)
MPX2
MPX1
* 1 : EUROPE
* 2 : AUSTRALIA
LG–R
R–L
IE5
IE4
MPX1
B 6 A, B 7 B
BODY ECU
ACT–
UL2
LSWP
L1
UL1
E
LGCY
L–W
L–R
Y
R–L
L–B
G
V–W
P–B
W–B
LG
IO
IL
IF
II
BA1
BB1
IA1
J 6
JUNCTION CONNECTOR
P 4
DOOR LOCK CONTROL SW [POWER WINDOW MASTER SW]
J14 A, J15 B
JUNCTION CONNECTOR
B10
BACK DOOR LOCK MOTOR
D 5 A, B
DOOR LOCK MOTOR, DOOR LOCK DETECTION SW AND DOOR KEY LOCK AND UNLOCK SW LH
J12
JUNCTION CONNECTOR
J 3
JUNCTION CONNECTOR
L 4
LUGGAGE COMPARTMENT LIGHT SW